BAUMEISTER
FENSTER. HAUSTÜREN. WINTERGÄRTEN.

Josef Baumeister GmbH
Siemensstr. 12
46325 Borken

Telefon 02861-9090-0
Telefax 02861-9090-298
www.baumeister-borken.de / info@baumeister-borken.de

# BESTELLUNG

**Bearbeiter/**
**Durchwahl-Tel.:** Alfes, Stephan Tel. 223

**Datum:** 05.02.2019

**An :**
**z.Hd. :**

[ ] EV 1

[x] Alufensterbänke Softline 40
Antidrön fertig aufgeklebt
incl. Schutzfolie

[ ] BC 4

[ ] Bordstücke B 404 ( Klinker )

[ ] weiß

[x] Bordstücke B 406 ( Putz )

[x] **RAL 7016**

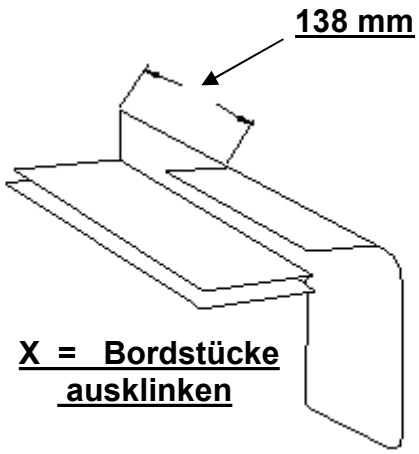


Kom-Nr./-Name **27150A** Wilma
Witzelstr 5BA

Liefertermin : **25.02.2019**

| Pos | Stück | Maße [mm] | Ausladung [mm] | Ausklinkung |
|---|---|---|---|---|
| 1 | 74 | 910 | 280 | x |
| 2 | 2 | 1060 | 280 | x |
| | | | | |
| | | | | |
| | | | | |
| | | | | |
| | | | | |
| | | | | |
| | | | | |
| | | | | |
| | | | | |
| | | | | |
| | | | | |
| | | | | |

| Pos | Stück | Maße [mm] | Ausladung [mm] | Ausklinkung |
|---|---|---|---|---|
| | | | | |
| | | | | |
| | | | | |
| | | | | |
| | | | | |
| | | | | |
| | | | | |
| | | | | |
| | | | | |
| | | | | |
| | | | | |
| | | | | |
| | | | | |
| | | | | |
| | | | | |
| | | | | |
| Summe | | 69,46 | lfdm | |
| Summe | | 76 | Stückzahl | |

Ausladung
50mm
70mm
90mm
110mm
130mm
150mm
165mm
180mm
195mm
210mm
225mm
240mm
260mm
280mm
300mm
320mm
340mm
360mm
400mm